RMU NO. 003 ELEVATIONS

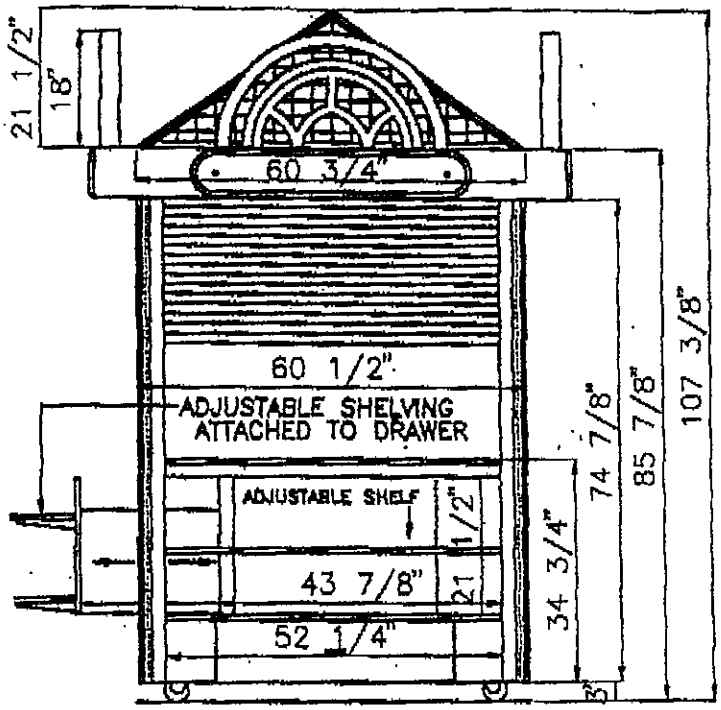

SIDE ELEVATION WITH STORAGE DRAWER PULLED OUT

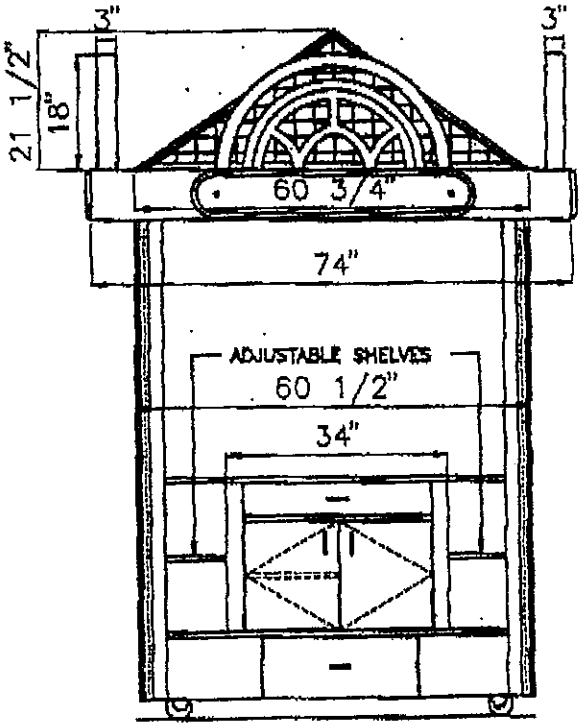

FRONT CASH WRAP ELEVATION

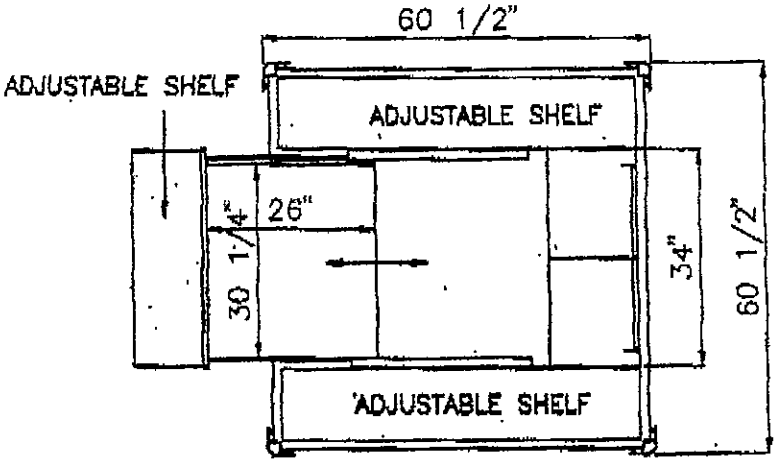

PLAN VIEW SECTION BELOW COUNTER

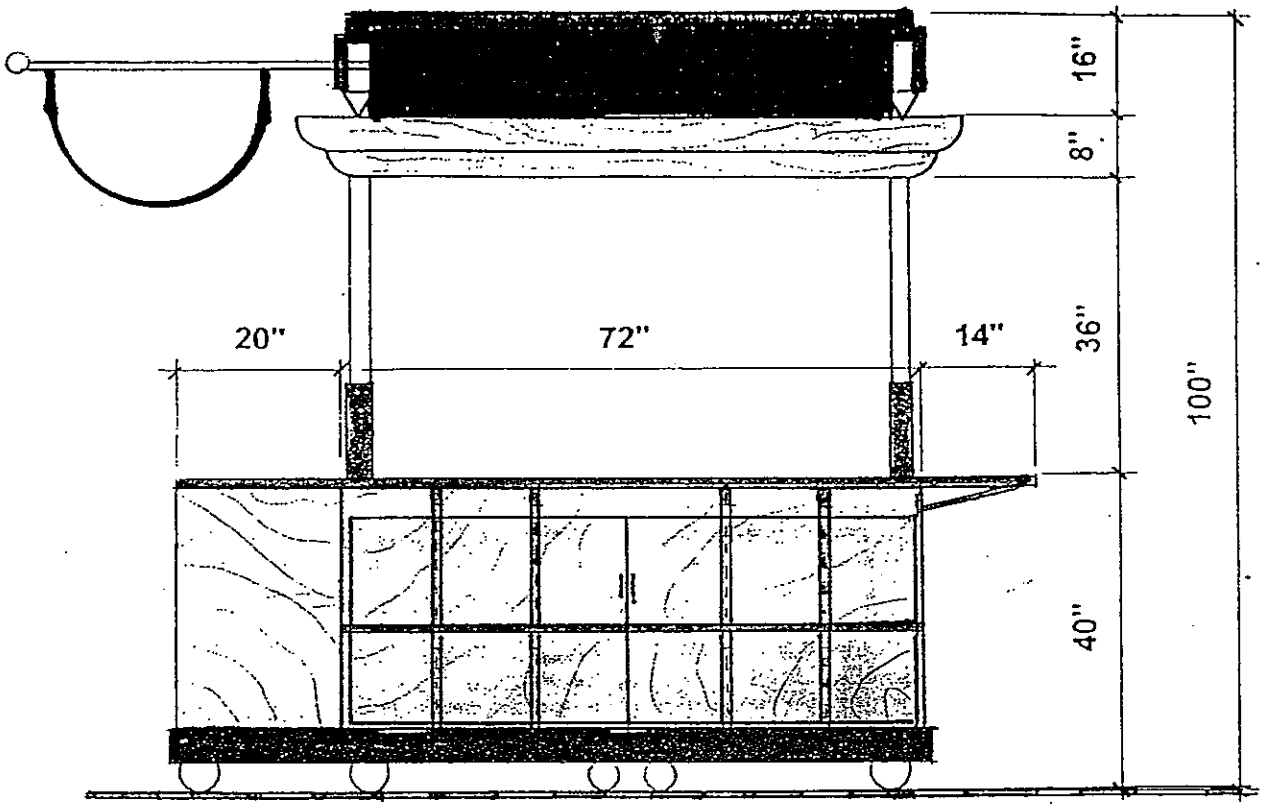

Front Elevation

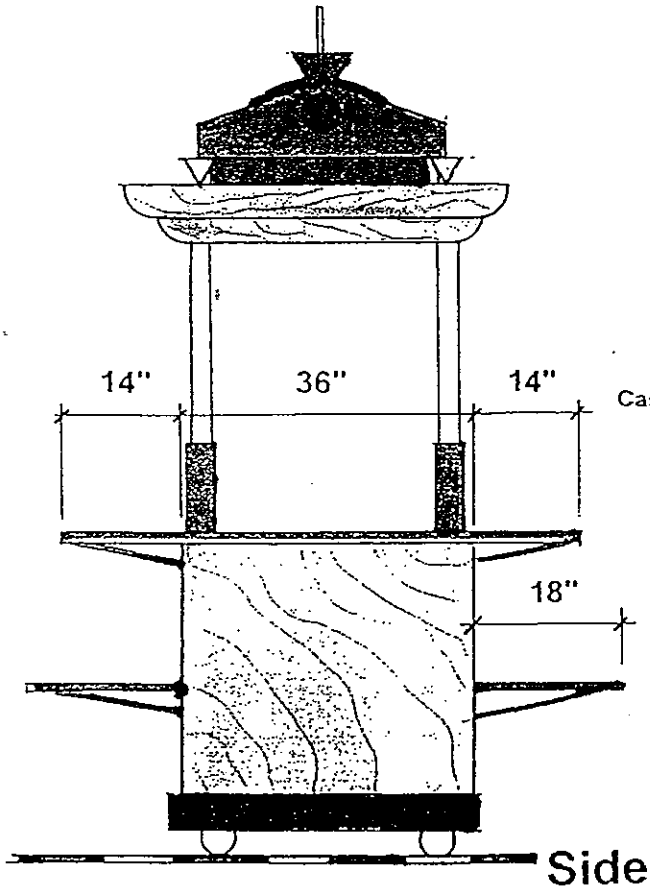

Side Elevation

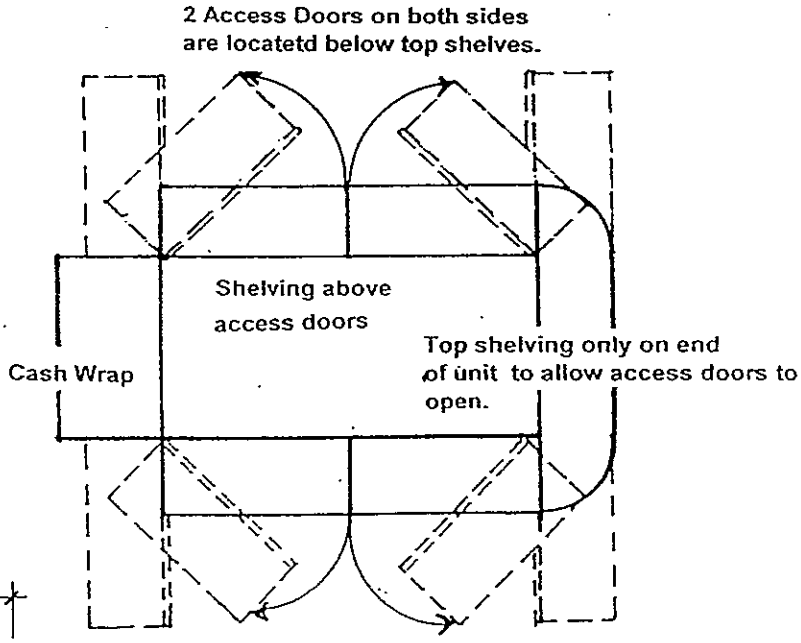

Top View of Base